Current part is item (3) on diagram. Available at www.oshkoshequipment.com

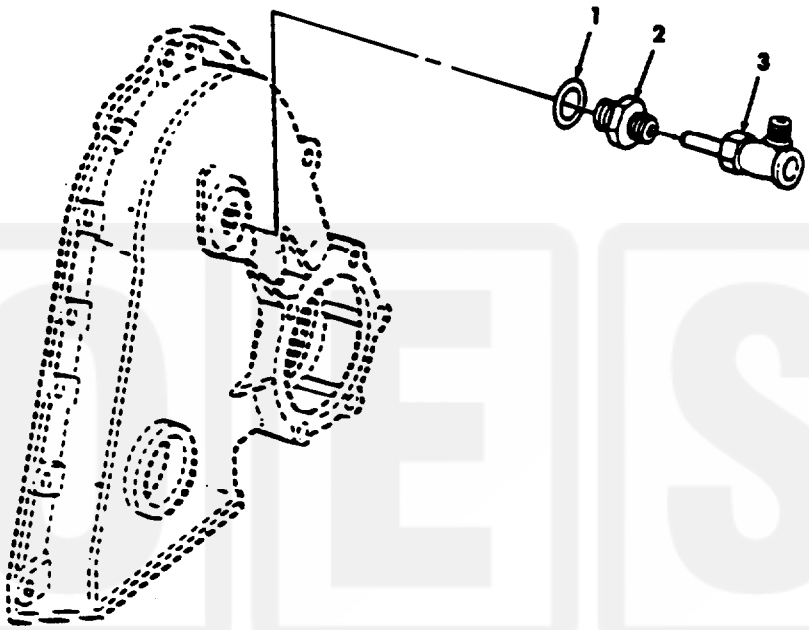

Figure 38. Tachometer Drive and Related Parts.

Oshkosh Equipment Sales

Current part is item (3) on diagram. Available at www.oshkoshequipment.com

Current part is item (3) on diagram. Available at www.oshkoshequipment.com

(1) ITEM NO	(2) SMR CODE	(3) NSN	(4) CAGEC	(5) PART NUMBER	(6) DESCRIPTION AND USABLE ON CODES (UOC)	(7) QTY
					GROUP 47 GAGES (NON-ELECTRICAL) WEIGHTING AND MEASURING DEVICES 4701 INSTRUMENTS	
					FIG. 38 TACHOMETER DRIVE AND RELATED PARTS	
1	PAOZZ	5330001995882	96906	MS35769-26	GASKET PART OF KIT P/N 57K1319	1
2	PAOZZ	6620000847621	19207	10912497	ADAPTER, TACHOMETER	1
3	PAOZZ	6620009951811	19207	11610078	ADAPTER ASSEMBLY	1

END OF FIGURE

Current part is item (3) on diagram. Available at www.oshkoshequipment.com